Wide view mast VM

Mast Model	Load center 600mm FD45T	Load center 500mm FD50TS	Load center 600mm FD50TF	Max-lift height	Mast height: Fork lowered FD45T/FD50TS	Mast height: Fork lowered FD50TF	Mast height: Fork lift withbackrest FD45T/FD50TS	Mast height: Fork lift withbackrest FD50TF	Free lift with backrest	Free lift without backrest	Tilt angle fwd-bwd	Weight FD45T	Weight FD50TS	Weight FD50TF
	kg	kg	kg	mm	mm	mm	mm	mm	mm	mm	deg	kg	kg	kg
VM300	4500	5000	5000	3000	2300	2365	4205	4360	140	140	6-12	7230	7230	7830
VM350	4500	5000	5000	3500	2550	2615	4705	4860	140	140	6-12	7293	7293	7893
VM400	4500	5000	5000	4000	2850	2915	5205	5360	140	140	6-6	7407	7407	8007
VM450	4500	5000	5000	4500	3100	3165	5705	5860	140	140	6-6	7471	7471	8071
VM500	4500	4500 *4600	5000	5000	3350	3415	6205	6360	140	140	6-6	7534	7534	8134
VM550	4000 *4400	4000 *4400	4000 *4800	5500	3650	3715	6705	6860	140	140	3-6	7610	7610	8210
VM600	3550 *4000	3550 *4000	3550 *4000	6000	3900	3965	7205	7360	140	140	3-6	7711	7711	8311

2 Stage free lift mast VFM

Mast Model	Load center 600mm FD45T	Load center 500mm FD50TS	Load center 600mm FD50TF	Max-lift height	Mast height: Fork lowered FD45T/FD50TS	Mast height: Fork lowered FD50TF	Mast height: Fork lift withbackrest FD45T/FD50TS	Mast height: Fork lift withbackrest FD50TF	Free lift with backrest	Free lift without backrest	Tilt angle fwd-bwd	Weight FD45T	Weight FD50TS	Weight FD50TF
	kg	kg	kg	mm	mm	mm	mm	mm	mm	mm	deg	kg	kg	kg
VFM250	4500	5000	5000	2500	2090	2110	3705	3860	755	1175	6-12	7114	7114	7714
VFM270	4500	5000	5000	2700	2190	2210	3905	4060	855	1280	6-12	7180	7180	7780
VFM300	4500	5000	5000	3000	2340	2360	4205	4360	955	1425	6-12	7200	7200	7800
VFM350	4500	5000	5000	3500	2590	2610	4705	4860	1255	1675	6-12	7220	7220	7820
VFM375	4500	5000	5000	3750	2715	2735	4955	5110	1380	1800	6-12	7280	7280	7880
VFM400	4500	5000	5000	4000	2890	2910	5205	5360	1555	1925	6-6	7305	7305	7905
VFM450	4500	5000	5000	4500	3140	3160	5705	5860	1805	2176	6-6	7335	7335	7935
VFM500	4000	4000 *4300	5000	5000	3390	3410	6205	6360	2055	2426	6-6	7455	7455	8055
VFM550	3200 *3900	3200 *3900	4000 *4800	5500	3690	3710	6705	6860	1710	2676	3-6	7505	7505	8105
VFM600	2500 *3700	2500 *3700	3550 *4000	6000	3940	3960	7205	7360	1960	2926	3-6	7655	7655	8255

3 Stage free lift mast VFHM

Mast Model	Load center 600mm FD45T	Load center 500mm FD50TS	Load center 600mm FD50TF	Max-lift height	Mast height: Fork lowered FD45T/FD50TS	Mast height: Fork lowered FD50TF	Mast height: Fork lift withbackrest FD45T/FD50TS	Mast height: Fork lift withbackrest FD50TF	Free lift with backrest FD45T、FD50TS/FD50TF FD45T、FD50TS/FD50TF	Free lift without backrest FD45T、FD50TS/FD50TF FD45T、FD50TS/FD50TF	Tilt angle fwd-bwd	Weight FD45T	Weight FD50TS	Weight FD50TF
	kg	kg	kg	mm	mm	mm	mm	mm	mm	mm	deg	kg	kg	kg
VFHM360	4500	4900	4800	3600	2026	2086	4805	4960	810/730	1240/1118	6-12	7580	7580	8180
VFHM400	4500	4900	4800	4000	2160	2220	5205	5360	944/864	1374/1252	6-12	7640	7640	8240
VFHM435	4500	4700	4800	4350	2276	2336	5555	5710	1060/980	1490/1368	6-12	7420	7420	8460
VFHM480	4500	4600	4800	4800	2460	2520	6005	6160	1244/1164	1674/1552	6-12	7500	7500	8540
VFHM500	4400	4000	4700	5000	2526	2586	6205	6360	1310/1230	1740/1618	6-12	7560	7560	8600
VFHM540	3300 *4300	3400 *4300	3500 *4600	5400	2660	2720	6605	6760	1444/1364	1874/1752	6-6	7720	7720	8760
VFHM550	3200 *4200	3200 *4200	3300 *4500	5500	2693	2753	6705	6860	1477/1397	1907/1785	3-6	7740	7740	8780
VFHM600	2400 *3900	2900 *4100	2900 *4300	6000	2893	2953	7205	7360	1677/1597	2107/1985	3-6	7820	7820	8860

Note: The mark of * is with double tires.

Tymbia

Handling & Warehouse Equipment

info@tymbia.com | www.tymbia.com

Tymbia

FD Series 45▸50

Counter Balanced Forklift

Three Features

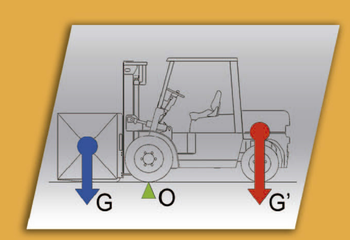

1 *High safety factor*

Compared with the similar forklift its balance weight increases more than 300kg, the stability and overloading are improved much.

2 *Powerful brake*

Strong and effective power brake system provides the most reliable security. Optimum design and priority system ensure the brake, as well keep the power distribution of othersystems, which makes operation more comfortable.

3 *High strength mast*

High strength-solder bath mast is forklift's strongest arm. Wide filed of front vision ensures the safety of operation and improves work efficiency.

Main Truck Specifications

Specifications	1	Manufacturer				TYMBIA	
	2	Model			FD45T	FD50TS	FD50TF
	3	Load capacity		kg	4500	5000	5000
	4	Load center		mm	600	500	600
	5	Power unit				Diesel	
	6	Operator type				Driver/Seat	
	7	Tire type	Front/Rear			Pneumatic	
	8	Wheels	Front/Rear			2/2	
Dimensions	9	Max.lifting height		mm		3000	
	10	Free lift		mm		140	
	11	Fork size	L×W×T	mm	1220×150×50	1070×150×50	1220×150×60
	12	Tilt angle	Forward/Backward	deg		6/12	
	13	Overall length(without fork)		mm		3183	3422
	14	Total width		mm		1485	
	15	Mast height(fork lowered)		mm		2300	2360
	16	Overall height fork raised(with backrest)		mm		4143	
	17	Height of head guard		mm		2420 (standard); 2270 (container type in optional)	
	18	Turning raduis(outside)		mm		2860	3100
	19	Load distance		mm		560	590
	20	Right angle stacking aisle (pallet size:1100×1100 add clearence)		mm		4668	4910
Performance	21	Speed	Travelling / Full/No load	km/h		17/21	
	22		Lifting / Full/No load	mm/s		420/540	440/540
	23		Lowering / Full/No load	mm/s		500/385	525/400
	24	Max.drawbar pull	Power shift T/M / Full/No load	kg		4500/2000	
	25	Gradeability at 1.6km/h	Power shift T/M / Full/No load	%		15	
Weights	26	Truck weight		kg		7483	7530
	27	Weight distribution	No load / Front axle	kg		2750	3390
			No load / Rear axle	kg		4733	4140
			Full load / Front axle	kg	10263	10910	11120
			Full load / Rear axle	kg	1720	1573	1410
Chassis & Wheels	28	Tires	Front/rear			300-15-18PR/7.00-12-12PR	
	29	Wheelbase		mm		2000	2200
	30	Tread	Front/rear	mm		1180/1190	
	31	Ground clearence	At lowest point (mast)/Frame	mm		100/240	
	32	Brake				Power Brake	
Drive Line	33	Engine	Model		XINCHAI 4D35ZG31	MITSUBISHI S6S	MITSUBISHI S6S
			Rated power	KW/rpm	60/2200	52/2300	52/2300
			Rated torque	N·m/rpm	300/1600~1800	248/1700	248/1700
			Number of cylinder		4	6	6
			Displacement	L	3.5	4.996	4.996
	34	Fuel tank capacity		L		80	
	35	Transmission type				Hydraulic torque transmission	
	36	Transmission	Shift stage (front/rear-type)	Power shift T/M		2-1 Electromagnetic Hydraulic	
	37	Operating pressure	Hydraulic System pressure	kg/cm2		200	

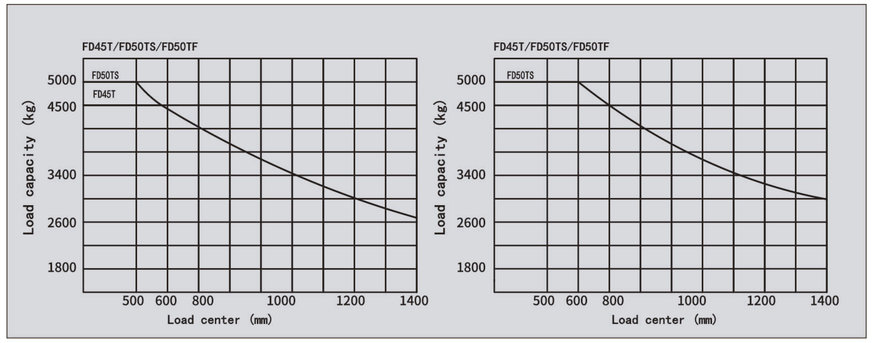

Notes:
Vertical axis represents load capacity; Horizontal axis shows load center, Load center are determined from front face of the fork.
Capacity based on a 1000mm cube load configuration with the center of gravity at the true center of the cube, and standard fork.
The load capacity will be reduced while the mast tilt forward or loading with long fork or lifting transformable width of goods.
Getting the load capacities at the various load centers timely via the load curve.
TYMBIA's products and specifications change without prior notice.
TYMBIA forklift truck has equipped with standard safety device.
TYMBIA is not responsible for the damage occurred by removing its safety device.

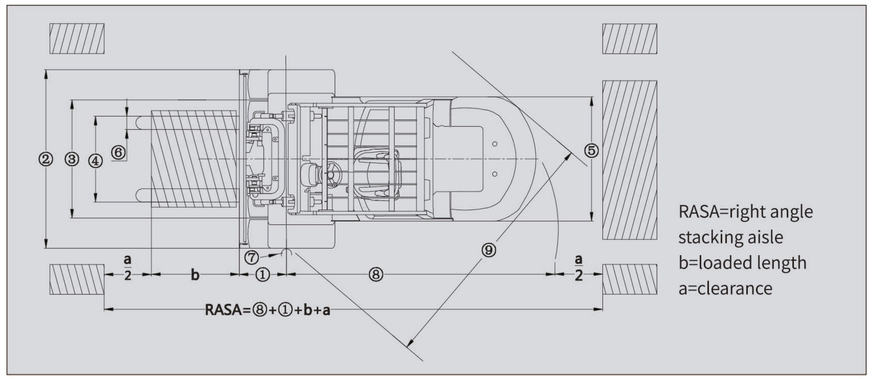

Model	FD45T	FD50TS	FD50TF
	mm	mm	mm
①Front Overhang	560	560	590
②Total Width	1485	1485	1485
③Front Track	1180	1180	1180
④Fork Spread(outside)	300~1370	300~1370	300~1370
⑤Rear Track	1190	1190	1190
⑥Fork Width	150	150	150
⑦Turning Radius(inside)	280	280	280
⑧Turning Radius(outside)	2860	2860	3100
⑨Right Angle Turning Aisle	4668	4668	4910

Standard equipments:
Wide view mast, Cyclone air cleaner With dust indicator, Load one-way valve, Preheat indicator, King Pin, Engine-start switch, Standard backrest, Long-life tires, Overhead guard, Oil and water separator, Power steering,Adjustable steering column, Radiator water tank, Side roller, Standard carriage.Oil temperature cooler, Headlamp and steering indicator lamp, Charge indicator lamp,Hour meter, Oil warning light of engine.Water temperature gauge, Fuel gauge, Reversing light, Electric horn, Neutral-safety switch,Paper file,Rear mirror, Tools, Reversing Buzzer, General seat.

Options:
Fire extingulsher, cab, Heater unit, Rear work light, Solld tires, Fireproof silencer, Upper exhaust pipe, Tilt cylinder jacket, Rotating warning light, LPG Conversion device, Pre-filtration air intake device.

Attachments:
Side shifter, Fork positioned, Carpet boom, Fork extension, Long fork, Flat clamp, Others.