FLB50-55F G1

Wide view mast VM

Mast model	Load center 500mm FLB50	Load center 600mm FLB50F	Load center 600mm FLB55F	Max.lift height	Mast height Fork lowered FLB50	Mast height Fork lowered FLB 50F/55F	Mast height Fork lift (with backrest) FLB50	Mast height Fork lift (with backrest) FLB 50F/55F	Tilt angle fwd-bwd FLB50	Tilt angle fwd-bwd FLB 50F/55F	Tilt angle fwd-bwd	Weight FLB50	Weight FLB 50F/55F
	kg	kg	kg	mm	mm	mm	mm	mm	mm	mm	deg	kg	kg
VM300	5000	5000	5500	3000	2300	2365	4205	4360	140	140	6 - 12	7230	7830
VM350	5000	5000	5500	3500	2550	2615	4705	4860	140	140	6 - 12	7293	7893
VM400	5000	5000	5500	4000	2850	2915	5205	5360	140	140	6 - 6	7407	8007
VM450	5000	5000	5500	4500	3100	3165	5705	5860	140	140	6 - 6	7471	8071
VM500	4500 *4600	5000	5500	5000	3350	3415	6205	6360	140	140	6 - 6	7534	8134
VM550	4000 *4400	4000 *4800	4500 *5200	5500	3650	3715	6705	6860	140	140	3 - 6	7610	8210
VM600	3550 *4000	3550 *4000	4000 *4400	6000	3900	3965	7205	7360	140	140	3 - 6	7711	8311

2 stage free lift mast VFM

Mast model	Load center 500mm FLB50	Load center 600mm FLB50F	Load center 600mm FLB55F	Max.lift height	Mast height Fork lowered FLB50	Mast height Fork lowered FLB 50F/55F	Mast height Fork lift (with backrest) FLB50	Mast height Fork lift (with backrest) FLB 50F/55F	Tilt angle fwd-bwd FLB50	Tilt angle fwd-bwd FLB 50F/55F	Tilt angle fwd-bwd	Weight FLB50	Weight FLB 50F/55F
	kg	kg	kg	mm	mm	mm	mm	mm	mm	mm	deg	kg	kg
VFM250	5000	5000	5500	2500	2090	2110	3705	3860	755	1175	6 - 12	7114	7714
VFM270	5000	5000	5500	2700	2190	2210	3905	4060	855	1280	6 - 12	7180	7780
VFM300	5000	5000	5500	3000	2340	2360	4205	4360	955	1425	6 - 12	7200	7800
VFM350	5000	5000	5500	3500	2590	2610	4705	4860	1255	1675	6 - 12	7220	7820
VFM375	5000	5000	5500	3750	2715	2735	4955	5110	1380	1800	6 - 12	7280	7880
VFM400	5000	5000	5500	4000	2890	2910	5205	5360	1555	1925	6 - 6	7305	7905
VFM450	5000	5000	5500	4500	3140	3610	5705	5860	1805	2176	6 - 6	7335	7935
VFM500	4000 *4300	5000	5500	5000	3390	3410	6205	6360	2055	2426	6 - 6	7455	8055
VFM550	3200 *3900	4000 *4800	4500 *5200	5500	3690	3710	6705	6860	1710	2676	3 - 6	7505	8105
VFM600	2500 *3700	3350 *4000	3800 *4500	6000	3940	3960	7205	7360	1960	2926	3 - 6	7655	8255

3 stage free lift mast VFHM

Mast model	Load center 500mm FLB50	Load center 600mm FLB50F	Load center 600mm FLB55F	Max.lift height	Mast height Fork lowered FLB50	Mast height Fork lowered FLB 50F/55F	Mast height Fork lift (with backrest) FLB50	Mast height Fork lift (with backrest) FLB 50F/55F	Tilt angle fwd-bwd FLB50/50F,55F	Tilt angle fwd-bwd FLB50/50F,55F	Tilt angle fwd-bwd	Weight FLB50	Weight FLB 50F/55F
	kg	kg	kg	mm	mm	mm	mm	mm	mm	mm	deg	kg	kg
VFHM360	4900	4800	5300	3600	2026	2086	4805	4960	810/730	1240/1118	6 - 12	7580	8180
VFHM400	4900	4800	5300	4000	2160	2220	5205	5360	944/864	1374/1252	6 - 12	7640	8240
VFHM435	4700	4800	5300	4350	2276	2336	5555	5710	1060/980	1490/1368	6 - 6	7420	8460
VFHM450	4600	4800	5300	4800	2326	2386	5705	5860	1110/1030	1540/1318	6 - 6	7460	8500
VFHM480	4600	4800	5300	4800	2460	2520	6005	6160	1244/1164	1674/1552	6 - 6	7500	8540
VFHM500	4000	4700	5200	5000	2526	2586	6205	6360	1310/1230	1740/1618	6 - 6	7560	8600
VFHM540	3400 *4300	3500 *4600	4000 *5100	5400	2660	2720	6605	6760	1444/1364	1874/1752	6 - 6	7720	8760
VFHM550	3200 *4200	3300 *4500	3800 *5000	5500	2693	2753	6705	6860	1477/1397	1907/1785	3 - 6	7740	8780
VFHM600	2900 *4100	2900 *4300	3400 *4800	6000	2893	2953	7205	7360	1677/1597	2107/1985	3 - 6	7820	8860

*When the products and specifications of TEU are changed due to improvement, TEU will not give further notice.

Tymbia

Handling & Warehouse Equipment

FLB50-55F G1

Lithium Battery counterbalance Forklift Truck

1 Revolutionary performance improvement

Compared with the traditional battery forkilft truck,the load Lifting speed and driving speed performance is higher,more power.

2 Wide view mast

Preeminent front operation view with unique designed wide view mast model VM),makes safer and more reliable operation.

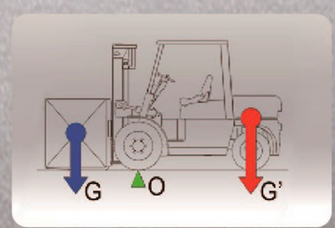

3 High safety factor

Heavier self-weight enhanced a bigger stablebility of the machine.

FLB50-55F G1

Main Truck Specifications

■ Standard Size

SPECIFICATION	Manufacturer					TYMBIA		
	Model					FLB50	FLB50F	FLB55F
	Configuration					G1		
	Max.lift capacity			kg		5000	5000	5500
	Load center			mm		500	600	
	Power unit					Lithium Iron Phosphate Battery (LFP Battery)		
	Operator type					Driver/seat		
DIMENSIONS	Max.lift height			mm	②	3000		
	Free lift			mm	④	140		
	Fork size	L ×W ×T		mm	⑥	1070×150×50	1220X150X60	1220X150X60
	Fork adjustment range(outside)			mm		300~1370		
	Tilt angle	fwd/bwd		deg	⑩	6/12		
	Total length with fork			mm	⑤	3183	3453	
	Total width			mm	⑪	1485		
	Mast height (fork lowered)			mm	③	2300	2360	
	Overall height fork raised (with backrest)			mm	①	4140		
	Height of head guard			mm	⑨	2420		
	Turning raduis (outside)			mm	⑭	2860	3100	
	Distance from front wheel center to forks face			mm	⑦	560	630	
	Right angle stacking aisle			mm	⑮	4670	4910	
PERFORMANCE	Speed	Max. travelling speed	full load	km/h		17	17	16
			no load	km/h		17		
		Lifting speed	full load	mm/s		350	340	320
			no load	mm/s		400		
		Lowering speed	full load	mm/s		430	500	
			no load	mm/s		330	350	
	Maximum traction force	No load		kN		20		
	Maximum Gradeability	full load/no load		%		15/18	14/18	13/18
	Operating pressure	Hydraulic system pressure		Mpa		19.6		
WEIGHTS	Truck weight			kg		6900	7300	7700
	Weight Distribution (with standard battery)	Full load	front	kg		10600	11000	11800
			rear	kg		1200	1300	1400
		No load	front	kg		2900	3100	3200
			rear	kg		4000	4200	4500
CHASSIS & WHEELS	Tires	Tires type	fwd/bwd			2 / 2		
		Wheel(x=driving)	fwd/bwd			Pneumatic Tyre		
		Model	front axle			300-15-18PR		
			rear axle			7.00-12-12PR		
	Wheelbase			mm	⑧	2000	2200	
	Tread	front		mm	⑫	1180		
		rear		mm	⑬	1190		
	Ground Clearence	At lowest point (mast)		mm		100		
		Frame		mm		240		
	Brake	Service brake				Hydraulic-foot pedal		
		Parking brake				Mechanical-hand lever		
DRIVE LINE	Battery(standard)	Voltage		V		153.6V		
		capacity		AH		230Ah/280Ah/346Ah		
	Electric motors	Drive motor		Kw		25		
		Hydraulic motor		Kw		20		
	Control mode					Liquid-cooled AC magnet synchronous type		

Load curve

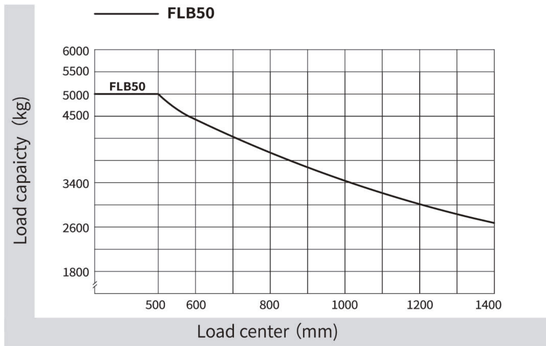

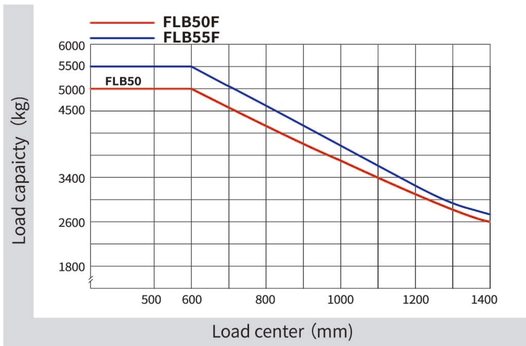

Notes:
- Vertical axis represents load capacity; Horizontal axis shows load center, Load center is determined from front face of the fork.
- Capacity based on a 1200mm cube load configuration with the center of gravity at the true center of the cube, and standard fork.
- The load capacity will be reduced while the mast tilt forward or loading with long fork or lifting transformable width of goods.
- Getting the load capacities at the various load centers timely via the load curve.
- products and specifications change without prior notice.
- forklift truck has equipped with standard safety device.
- not responsible for the damage occurred by removing its safety device.

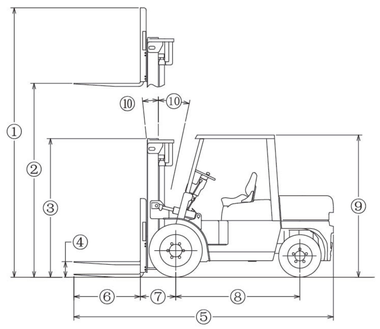

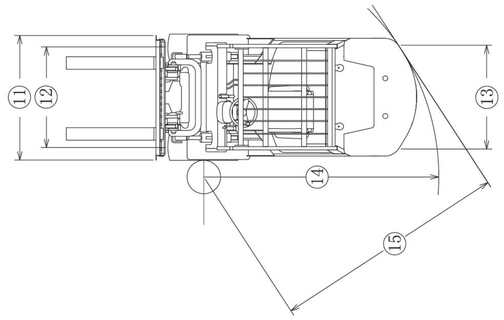

Standard equipments

- Wide view mast
- Long-life tires
- Side roller
- Headlamp andsteering indicator lamp
- Electric horn
- Load one-way valve
- Overhead guard
- Standard carriage
- Charge indicator lamp
- General seat
- King Pin
- Power steering
- Reversing Buzzer
- Hour meter
- Rear mirror
- Standard backrest
- Adjustable steering column
- Tools
- Reversing light

Options

- Fire extinguisher
- Heater unit
- Solid tires
- Tilt cylinder jacket
- Rotating warning light
- cab
- Rear work light

Attachments

- Side shifter
- Carpet boom
- Longer forks
- Clamps
- Others
- Fork positioner
- Fork extension